# SAVANNAH TANK
## AND EQUIPMENT CORPORATION

Savannah Tank and Equipment Corp.
1517 Telfair Road
Savannah, GA 31415
United States

Ph: 912-233-8902 Fax: 912-233-8921

## Purchase Order

Number: 40306 Date: 09-Dec-25
Revision:

**To**

Orlando Cepeda
LGG INDUSTRIAL, INC
DEPT #6491
P.O. BOX 11407
BIRMINGHAM, AL 35246-6491

Ph: 800-673-7373 Fax:

**Ship To**

Savannah Tank and Equipment Corp.
1517 Telfair Road
Savannah, GA 31415
United States

Ph: 912-233-8902 Fax: 912-233-8921

| Terms | Ship Via | FOB | Issued By |
|---|---|---|---|
| 1 10 Net 30 | Vendor Truck | Destination | NICK |

| Quantity | Description | Unit Price | Amount |
|---|---|---|---|
| 2 ea<br>Line: 001 | GASKET<br>As Specified<br>GASKET RING, 1/4" THK AS PER DRAWING WITH HOLES<br>NITRILE RUBBER<br>Qty: 2 ea Due: 16-Dec-25<br>Job: 25-089 | $85.97 ea | $171.94 |
| 1 ea<br>Line: 002 | GASKET RING 1/8X8 150#<br>Gasket Ring 1/8"x8" 150#<br>PTFE<br>Qty: 1 ea Due: 16-Dec-25<br>Job: 25-089 | $40.23 ea | $40.23 |
| 1 ea<br>Line: 003 | GASKET RING 1/8X4 150#<br>Gasket Ring 1/8"x4" 150#<br>PTFE<br>Qty: 1 ea Due: 16-Dec-25<br>Job: 25-089 | $18.66 ea | $18.66 |
| 1 ea<br>Line: 004 | SHIPPING<br>Qty: 1 ea Due: 16-Dec-25<br>Job: 25-089 | $49.50 ea | $49.50 |
| | Savannah Tank accepts NO material from China excluding nuts & bolts.<br>Our purchase order number must appear on all invoices, shipping papers and packages. | Total: | $280.33 US Dollars |

# SAVANNAH TANK
## AND EQUIPMENT CORPORATION

Savannah Tank and Equipment Corp.
1517 Telfair Road
Savannah, GA 31415
United States

Ph: 912-233-8902 Fax: 912-233-8921

## Purchase Order

Number: 40306 Date: 09-Dec-25
Revision:

**To**

Orlando Cepeda
LGG INDUSTRIAL, INC
DEPT #6491
P.O. BOX 11407
BIRMINGHAM, AL 35246-6491

Ph: 800-673-7373 Fax:

**Ship To**

Savannah Tank and Equipment Corp.
1517 Telfair Road
Savannah, GA 31415
United States

Ph: 912-233-8902 Fax: 912-233-8921

| Terms | Ship Via | FOB | Issued By |
|---|---|---|---|
| 1 10 Net 30 | Vendor Truck | Destination | NICK |

| Quantity | Description | Unit Price | Amount |
|---|---|---|---|
| | Invoices can be submitted electronically to: APInvoice@savannahtank.com<br>Material test reports are to be furnished with shipment.<br>All Materials must be delivered free from Defects in Material and Workmanship.<br>Vendor will repair or replace defective parts at the vendor's expense for a period of eighteen (18) months from the date material is received at Savannah Tank.<br>Materials must be protected from damage in transit.<br>Plate items to be palletized can not exceed 5,000 pounds.<br>Unit cost must reflect the full cost of the item. Any additional charges (such as Environmental Fees, Fuel Surcharges, and Processing Fees) that appear on the invoice that were not reflected in your response to the RFQ and/or included in our PO will not be paid.<br>Deliveries to be made on Monday - Thursday between 6:30 AM and 1:30 PM.<br>Material to be marked in accordance with the identification requirements of ASME Section VIII & II, Division 1.<br>Heads shall be in accordance w/ paragraphs UG-79 & UG-81 of Sect. VIII, Div. 1 ASME B & PV code, latest edition. | | |
| | | | |

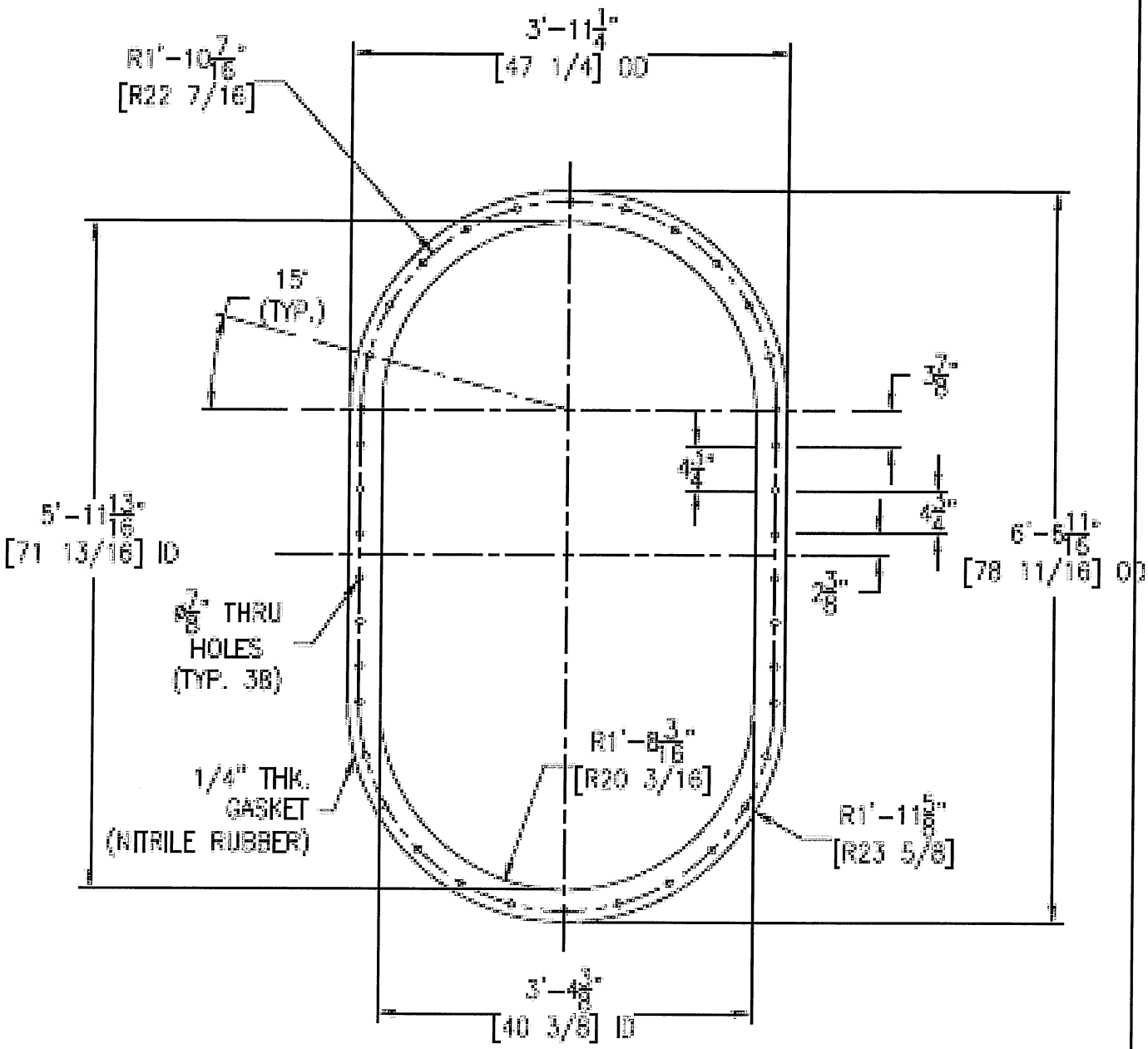


GASKET DETAIL